# alpro

## Adjustable Concealed Door Closer

## PRO50




The Alpro PRO50 Variable Strength concealed overhead door closer offers a flexible door control solution for single or double action aluminium doors. Designed for concealment within the transom header, the adjustable spring mechanism provides three selectable power settings, allowing a single closer to accommodate a range of door sizes and weights. Dual adjustable closing speeds ensure smooth, controlled operation, while 90° hold open and no hold open options are available. Each closer is supplied complete with fixing pack, bottom pivot and arm.

Standard spindle length is 12mm, with 17mm, 22mm and 28mm extended spindle versions available. Replacement components are also available for retrofit installations and maintenance.

**51A10**

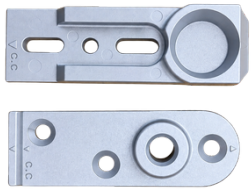

**51A4**

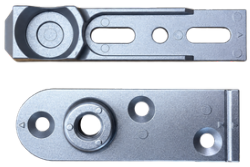

**51A5**



**51A5-H**



**51A1**

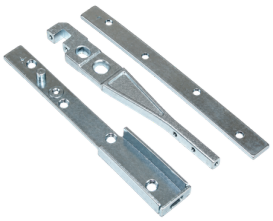

**51A2**



**51A3**



**3 YEAR WARRANTY**

Adjustable Concealed Door Closer - **PRO50**

## Ordering Information

| Description | Side Load (Includes 51A2 Arm) Code | End Load (Includes 51A3 Arm) Code | Short Side Load (Includes 51A1 Arm) Code |
|---|---|---|---|
| Variable strength - no hold open | 510900T1-U | 510900T2-U | 510900T3-U |
| Variable strength - 90° hold open* | 510990T1-U | 510990T2-U | 510990T3-U |

| | |
|---|---|
| Special top arm assembly - short side load | 51A1 |
| Standard side load top arm assembly | 51A2 |
| End load top arm assembly - use for round nose stiles | 51A3 |
| Standard bottom pivot assembly (include in closer kit) | 51A4 |
| "F" bracket, closing jamb/header bar bracket including fixings | 51A5 |
| Heavy duty bottom pivot assembly - maximum weight 120kg | 51A10 |

**For 17mm Extended Spindle, change code to 'X-U' i.e. 510990T1X-U**
**For 22mm Extended Spindle: change code to 'X-U-22' i.e. 510990T1X-U-22**
**For 28mm Extended Spindle: change code to 'X-U-28' i.e. 510990T1X-U-28**

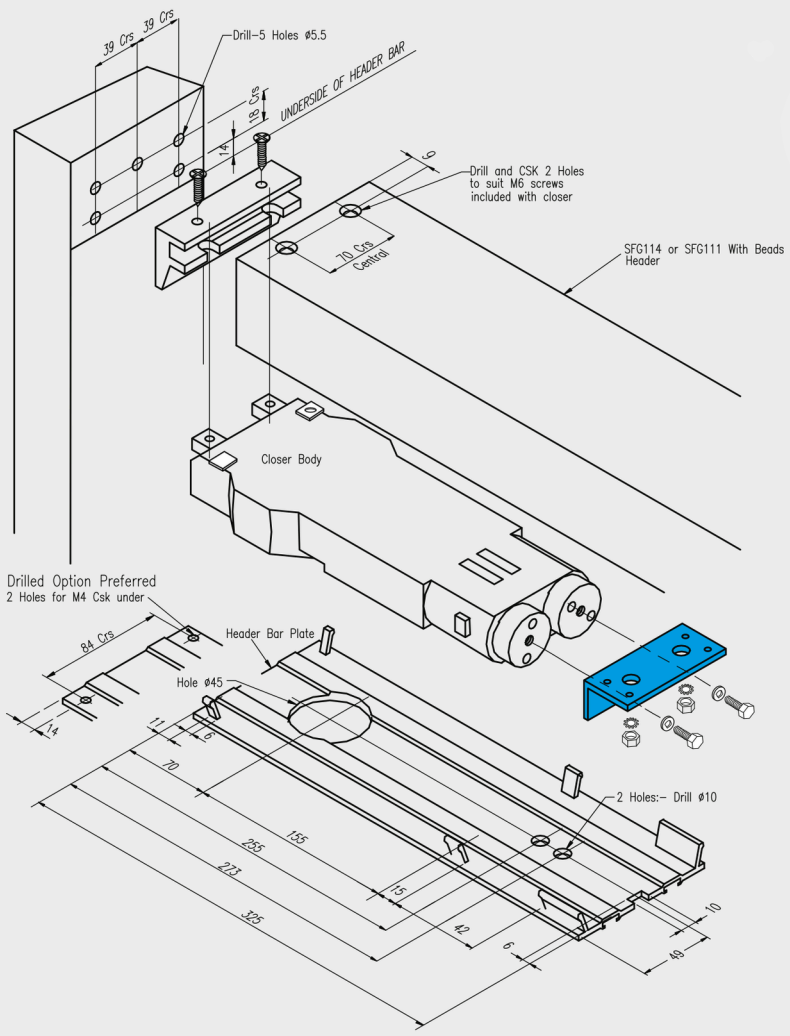


***Variable - If replacing a standard closer with variable strength, the bracket highlighted below will need to be changed. This is supplied with the variable strength closer.**

**NB:**
**Trade pack quantity for all closer types is 4**
**17mm Extended Spindle, change code to 'X-U' i.e 510190T1X-U**
**22mm Extended Spindle, change code to 'X-U-22' i.e 510190T1X-U-22**
**28mm Extended Spindle, change code to 'X-U-28' i.e 510190T1X-U-28**
**Dimensions:** 293mm x 90mm
**Concealed thickness:** 37mm

**Maximum door width:** Light spring - under 750mm (size 1)
Medium spring - 751mm to 950mm (size 2)
Heavy spring - 951mm to 1150mm (size 3)

**Maximum door weight:** 100kg - Standard pivot, 120kg - Heavy duty pivot
Maximum door height: 2540mm

**Closing speed:** Dual; initial closing speed is factory preset. Final closing speed is fully adjustable after installation

**Lubrication:** Stable hydraulic fluid suitable for most climatic conditions and constant lubrication

All dimensions are shown in mm.


Harwell Road, Nuffield Estate, Poole, Dorset, BH17 0BD Tel: 01202 676262 I info@alpro.co.uk
Registered in England & Wales 1925337 | © February 2020 IEC. All rights reserved | All dimensions are nominal and subject to tolerances.