alpro

RIM Electric Strike

AL150



The Alpro AL150 series security rim strikes are designed for use with the majority of popular rim latches used on timber door applications.

12/24VDC Selectable

Stainless Steel

Low Current Consumption
200mA - 12VDC continuous (±15%)
100mA - 24VDC continuous (±15%)

Simple Fail Safe/Fail Secure Changeover

Compact Cast Aluminium Body
Enclosed in one-part case

Easy Installation
Stick on/peel off template

Finish
Black polyester powder paint

Compliance

- Electromagnetic Compatibility - Directive 2014/30/EU
- Restriction of the Use of certain Hazardous Substances in Electrical and Electronic Equipment (RoHS) Directive 2011/65/EU"

AC Compatibility (with RM1)

The rectifier sounder module enables operation with AC voltages. The sounder can be set for either buzzing or silence with both AC and DC voltages. The RM1 unit is continuously rated – max 1 amp.

6 YEAR WARRANTY

Lock Compatibility

Accepts 12mm latch bolt when fitted with 3mm door gap

Ordering Information

Description	Function	Code
12/24VDC RIM Electric Strike	Fail Safe/PTL	**AL151**
12/24VDC RIM Electric Strike	Fail Secure/PTO	**AL152**

Accessories

Rectifier Sounder Module	**IEC-RM1**

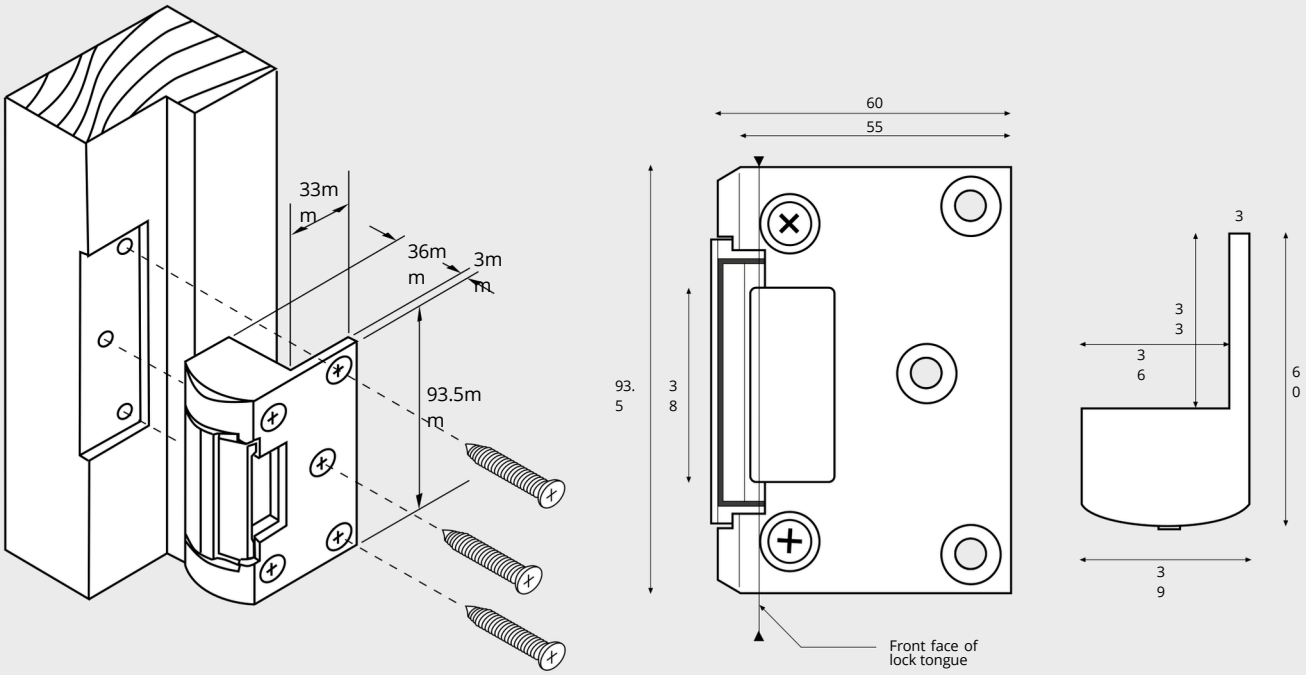

All dimensions are shown in mm.

Harwell Road, Nuffield Estate, Poole, Dorset, BH17 0BD Tel: 01202 676262 I info@alpro.co.uk

Registered in England & Wales 1925337 | © February 2020 IEC. All rights reserved | All dimensions are nominal and subject to tolerances.