alpro

Round Mortice Cylinder Deadlatches

524510 Lock Type

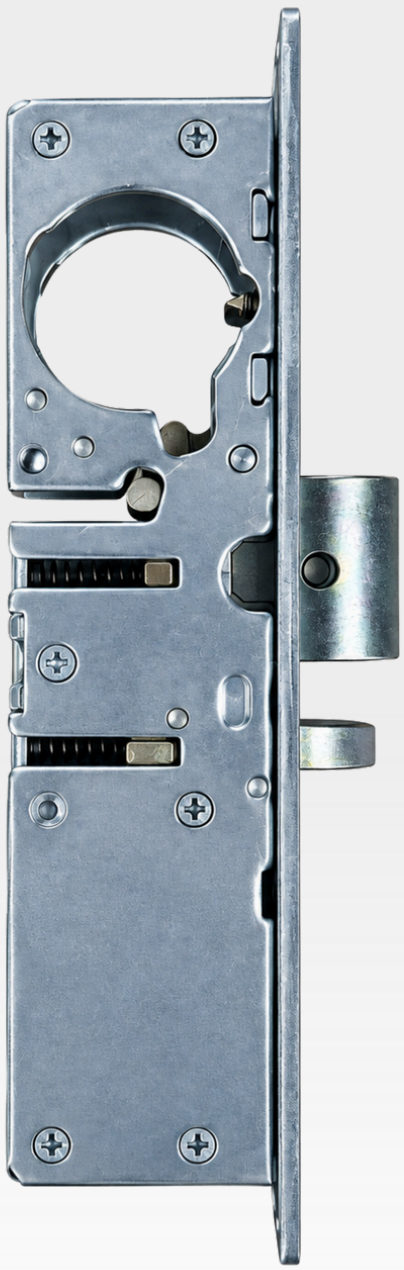

Deadlatches offer flexible control of situations and can be used in conjunction with electric strikes to provide the added option of remote access control. Designed to operate on doors with 3mm door gaps, the deadlatches can also be operated with the Alpro Lever and paddle handle.

Features

- All round mortice deadlatches are reversible, Pre-set to right hand
- Range of back sets available
- Locks accept standard $1\frac{5}{32}$ inches (29.37mm) mortice key or thumbturn cylinder
- Faceplate finish SAA
- Industry standard ANSI cut outs
- Latch hold back facility
- Latches compatible for use with electric strikes

Instructions for changing or reversing the deadlatch

- Undo & remove the screw in the middle of the deadlatch.
- Remove the deadlatch and reverse its orientation.
- Reattach the deadlatch, insert & tighten the screw.

Round Mortice Cylinder Deadlatches - **524510 Lock Type**

3 YEAR WARRANTY

Ordering Information

Description	Code
Deadlatch complete with strike plate to suit round mortice cylinder 1 1/8" back set Reversible (RH)	5245101
Deadlatch complete with strike plate to suit round mortice cylinder 31/32" back set Reversible (RH)	5245103
Deadlatch complete with strike plate to suit round mortice cylinder 1 1/2" back set Reversible (RH)	5245105
Flat faceplate SAA - width 25mm	52FP4511
Radius faceplate SAA - width 25mm	52FP4512
Radius faceplate with weather strip SAA - width 25mm	52FP4513
Strike plate	5235
Deadlatch fixing kit - width 25mm	5245-FIX-KIT
Extended strike plate	5245ESP

Imperial Backset	Metric Equivalent	Dimension A
31/32”	24.6mm	41.4mm
$1\frac{1}{8}$	28.6mm	45.2mm
$1\frac{1}{2}$	38.1mm	50mm

Handing of doors for locks

The description of swinging door operation always viewed from the outside.

LH: Door hinges on left

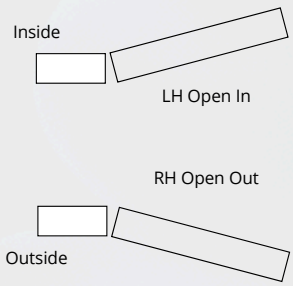

RH: Door hinges on right

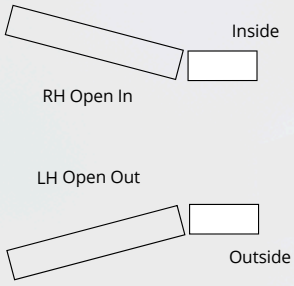

* DL-4510E Deadlatch Lock Steel in Zinc Plated
* FP-4511Flat Faceplate

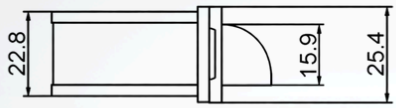

"A"

BACKSET	”A”
31/32”	1.62”
1–1/8”	1.78”
1–1/2”	2.25”

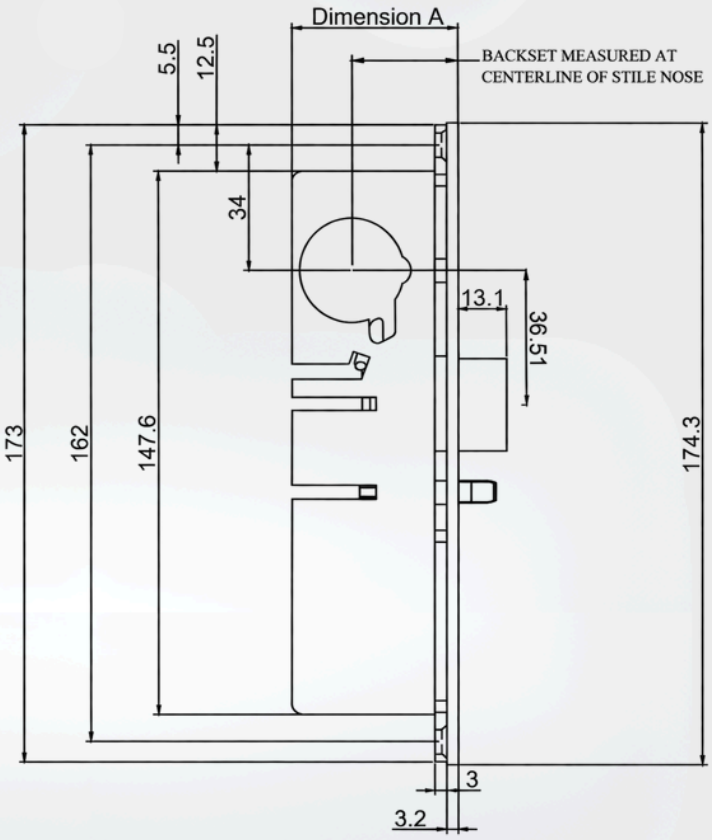

524510 Lock Type

All dimensions are shown in mm.

Harwell Road, Nuffield Estate, Poole, Dorset, BH17 0BD Tel: 01202 676262 I info@alpro.co.uk
Registered in England & Wales 1925337 | © February 2020 IEC. All rights reserved | All dimensions are nominal and subject to tolerances.